DESIGN + ENGINEERING
GROHE GERMANY

99.0556.031/ÄM 235391/02.16

www.grohe.com

Pure Freude an Wasser

GROHE

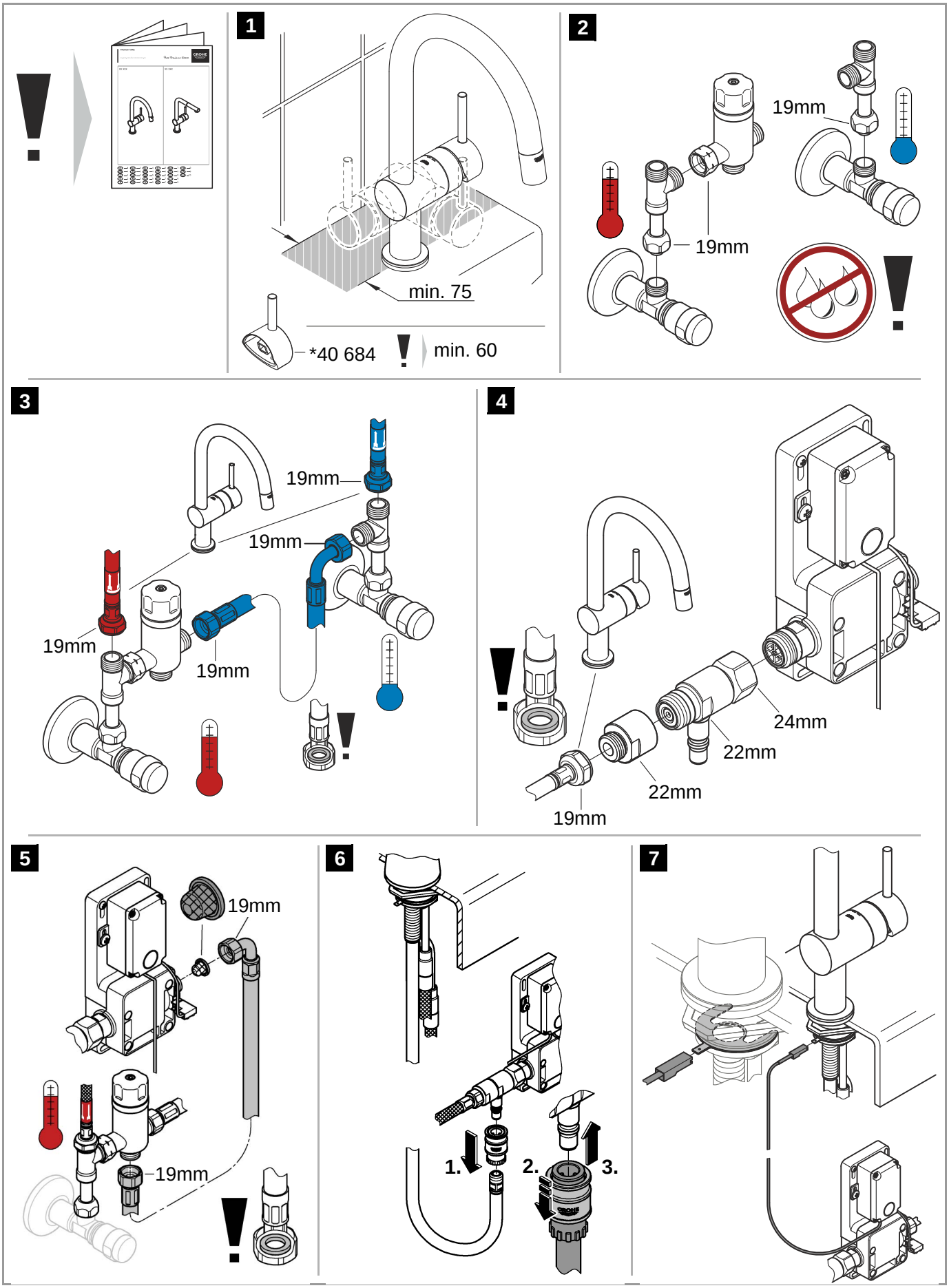

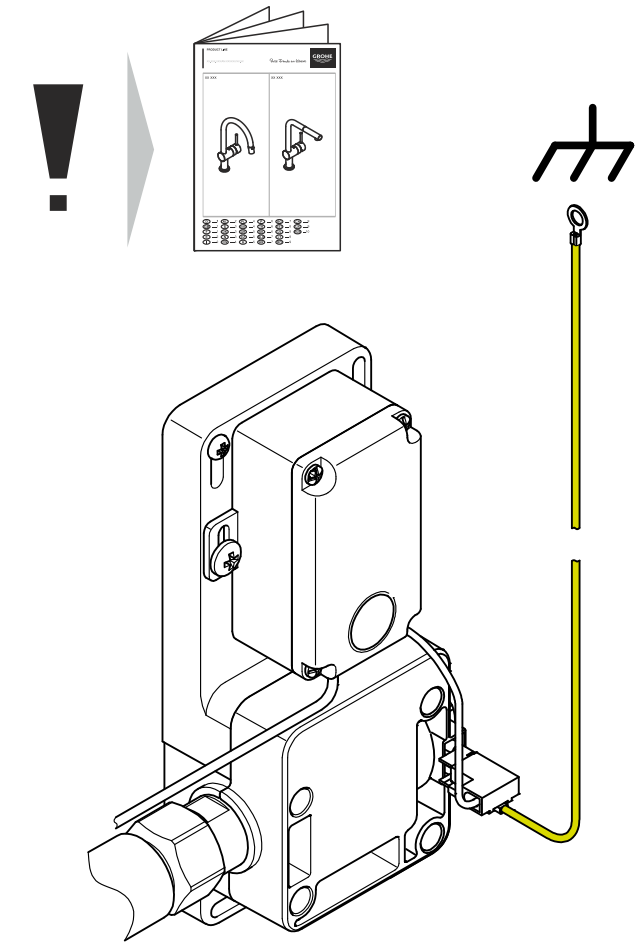

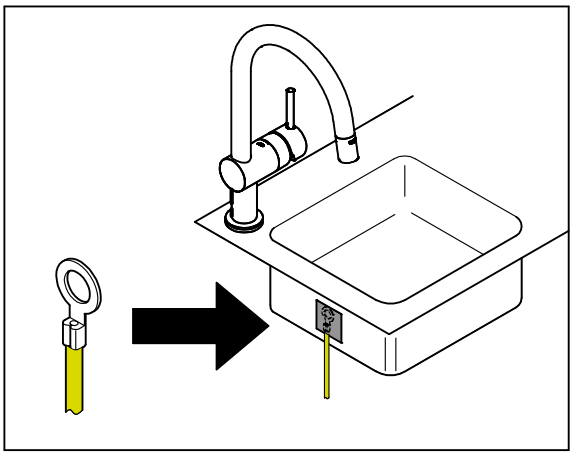

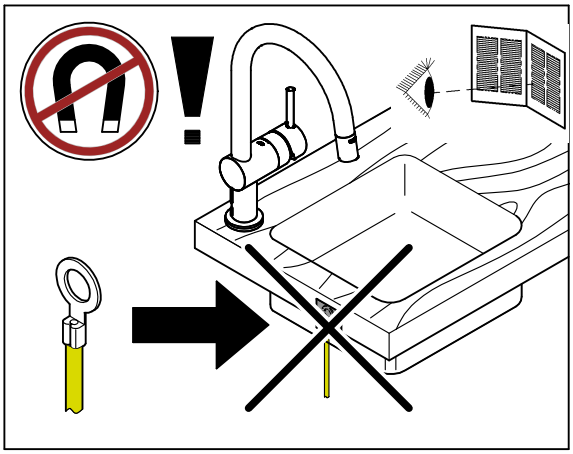

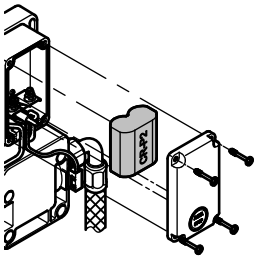

1

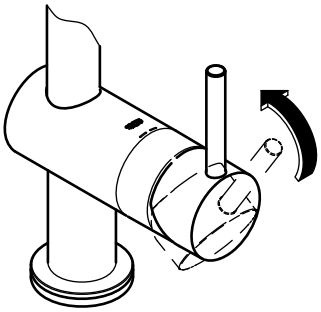

2

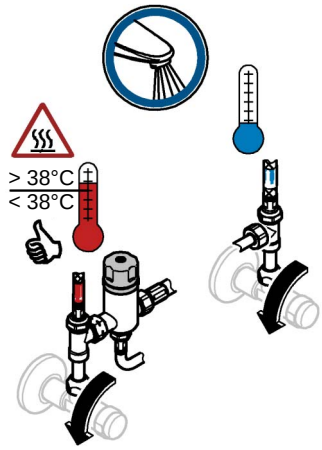

3

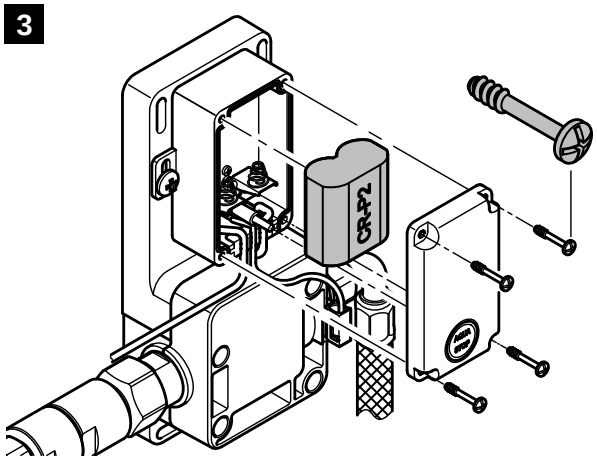
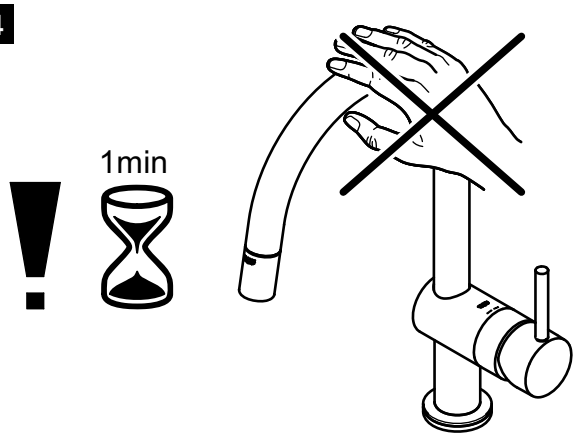
4